J.C. GUPTA & SONS

Fastener Super Speciality

Since : 1993

GSTIN : 29AABFJ2719C1ZO
IEC : 00710030274

#7/A, Sree Venkateshwara Building, Sadar Patrappa Road, Bengaluru - 560002

41478141, 9880539870 www.jcfasteners.com sales@jcfasteners.com

DIN 9021 LARGE WASHER

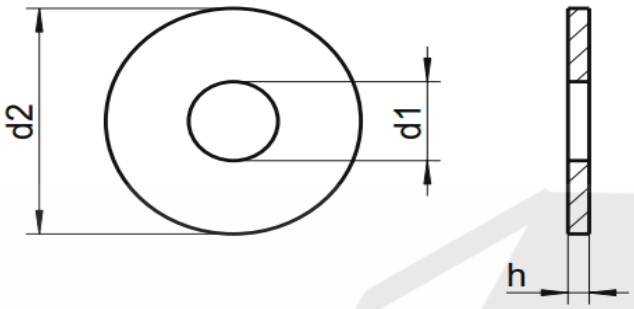

RoHS

Catalogue Datasheet B6D03

Stainless Steel A4/1.4401 (SS316)

Quote the item code given below with your order/ inquiries:

Dimensions in mm

Bolt Size (Nominal Size)	Item Code	Clearance Hole Diameter d1		Outside Diameter d2		Thickness h		
		min = nominal size	max	max = nominal size	min	Nom	max	min
**M1.6 (A1.7)	B6D0310605	1.70	1.84	5.00	4.64	0.50	0.60	0.40
**M1.6 (A1.7)	B6D0310606	1.70	1.84	6.00	5.64	0.50	0.60	0.40
**M2 (A2.2)	B6D0302505	2.20	2.34	5.50	5.14	0.50	0.60	0.40
*M2 (A2.2)	B6D0302006	2.20	2.34	6.00	5.64	0.80	0.90	0.70
**M2 (A2.2)	B6D0302007	2.20	2.34	7.00	6.64	0.50	0.60	0.40
**M2.5 (A2.7)	B6D0325107	2.70	2.84	7.00	6.64	0.50	0.60	0.40
M2.5 (A2.7)	B6D0320508	2.70	2.84	8.00	7.64	0.80	0.90	0.70
**M2.5 (A2.7)	B6D0325110	2.70	2.84	10.00	9.57	0.50	0.60	0.40
**M3 (A3.2)	B6D0303008	3.20	3.38	8.00	7.64	0.80	0.90	0.70
M3 (A3.2)	B6D0303009	3.20	3.38	9.00	8.64	0.80	0.90	0.70
**M3 (A3.2)	B6D0303012	3.20	3.38	12.00	11.57	0.80	0.90	0.70
**M3 (A3.2)	B6D0303014	3.20	3.38	14.00	13.57	0.80	0.90	0.70
M3.5 (A3.7)	B6D0330511	3.70	3.88	11.00	10.57	0.80	0.90	0.70
**M4 (4.3)	B6D0304110	4.30	4.48	10.00	9.57	0.80	0.90	0.70
M4 (4.3)	B6D0304012	4.30	4.48	12.00	11.57	1.00	1.10	0.90
**M4 (4.3)	B6D0304114	4.30	4.48	14.00	13.57	0.80	0.90	0.70
**M4 (4.3)	B6D0304116	4.30	4.48	16.00	15.57	0.80	0.90	0.70
**M5 (A5.3)	B6D0305112	5.30	5.48	12.00	11.57	1.00	1.20	0.80
*M5 (A5.3)	B6D0305012	5.30	5.48	12.00	11.57	1.20	1.40	1.00
M5 (A5.3)	B6D0305015	5.30	5.48	15.00	14.57	1.20	1.40	1.00
**M5 (A5.3)	B6D0305116	5.30	5.48	16.00	15.57	1.00	1.20	0.80
**M5 (A5.3)	B6D0305120	5.30	5.48	20.00	19.48	1.00	1.20	0.80
**M6 (A6.4)	B6D0306114	6.40	6.62	14.00	13.57	1.20	1.40	1.00
*M6 (A6.4)	B6D0306116	6.40	6.62	16.00	15.57	1.20	1.40	1.00
*M6 (A6.4)	B6D0306016	6.40	6.62	16.00	15.57	1.60	1.80	1.40
**M6 (A6.4)	B6D0306118	6.40	6.62	18.00	17.57	1.20	1.40	1.00
M6 (A6.4)	B6D0306018	6.40	6.62	18.00	17.57	1.60	1.80	1.40
**M6 (A6.4)	B6D0306124	6.40	6.62	24.00	23.48	1.20	1.40	1.00
*M6 (A6.4)	B6D0306025	6.40	6.62	25.00	24.48	1.60	1.80	1.40
**M7 (A7.4)	B6D0307116	7.40	7.62	16.00	15.57	1.50	1.70	1.30
**M7 (A7.4)	B6D0307120	7.40	7.62	20.00	19.48	1.50	1.70	1.30
M7 (A7.4)	B6D0307022	7.40	7.62	22.00	23.48	2.00	2.20	1.80

J.C. GUPTA & SONS

Fastener Super Speciality

Since : 1993

GSTIN : 29AABFJ2719C1ZO
IEC : 00710030274

#7/A, Sree Venkateshwara Building, Sadar Patrappa Road, Bengaluru - 560002

41478141, 9880539870 www.jcfasteners.com sales@jcfasteners.com

DIN 9021 LARGE WASHER

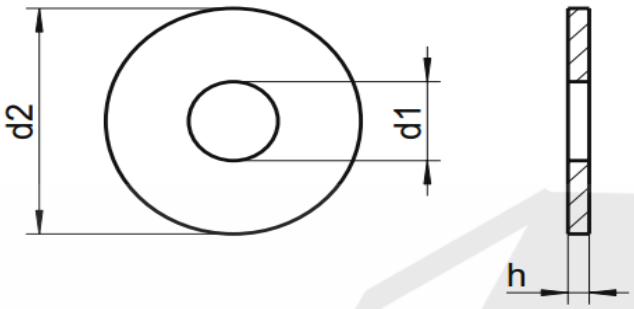

RoHS

Catalogue Datasheet B6D03

Stainless Steel A4/1.4401 (SS316)

Quote the item code given below with your order/ inquiries:

Dimensions in mm

Bolt Size (Nominal Size)	Item Code	Clearance Hole Diameter d1		Outside Diameter d2		Thickness h		
		min = nominal size	max	max = nominal size	min	Nom	max	min
**M7 (A7.4)	B6D0307127	7.40	7.62	27.00	26.48	1.50	1.70	1.30
**M8 (A8.4)	B6D0308118	8.40	8.62	18.00	17.57	1.50	1.70	1.30
**M8 (A8.4)	B6D0308122	8.40	8.62	22.00	21.48	1.50	1.70	1.30
M8 (A8.4)	B6D0308024	8.40	8.62	24.00	23.48	2.00	2.20	1.80
**M8 (A8.4)	B6D0308130	8.40	8.62	30.00	29.48	1.50	1.70	1.30
**M10 (A10.5)	B6D0310122	10.50	10.77	22.00	21.48	2.00	2.20	1.80
*M10 (A10.5)	B6D0310025	10.50	10.77	25.00	24.48	2.50	2.70	2.30
**M10 (A10.5)	B6D0310127	10.50	10.77	27.00	26.48	2.00	2.20	1.80
M10 (A10.5)	B6D0310030	10.50	10.77	30.00	29.48	2.50	2.70	2.30
**M10 (A10.5)	B6D0310136	10.50	10.77	36.00	35.48	2.00	2.20	1.80
**M12 (A13)	B6D0312127	13.00	13.27	27.00	26.48	2.50	2.70	2.30
*M12 (A13)	B6D0312030	13.00	13.27	30.00	29.48	3.00	3.30	2.70
**M12 (A13)	B6D0312132	13.00	13.27	32.00	31.48	2.50	2.70	2.30
M12 (A13)	B6D0312037	13.00	13.27	37.00	36.38	3.00	3.30	2.70
**M12 (A13)	B6D0312140	13.00	13.27	40.00	39.38	2.50	2.70	2.30
*M12 (A13)	B6D0312050	13.00	13.27	50.00	49.38	3.00	3.30	2.70
**M14 (A15)	B6D0314130	15.00	15.27	30.00	29.48	2.50	2.70	2.30
**M14 (A15)	B6D0314136	15.00	15.27	36.00	35.48	2.50	2.70	2.30
M14 (A15)	B6D0314044	15.00	15.27	44.00	43.38	3.00	3.30	2.70
**M14 (A15)	B6D0314145	15.00	15.27	45.00	45.38	2.50	2.70	2.30
**M16 (A17)	B6D0316032	17.00	17.27	32.00	31.48	3.00	3.30	2.70
**M16 (A17)	B6D0316040	17.00	17.27	40.00	39.38	3.00	3.30	2.70
M16 (A17)	B6D0316050	17.00	17.27	50.00	49.38	3.00	3.30	2.70
M18 (A20)	B6D0318056	20.00	20.52	56.00	54.10	4.00	4.60	3.40
M20 (A22)	B6D0320060	22.00	22.52	60.00	58.10	4.00	4.60	3.40
M24 (A26)	B6D0324072	26.00	26.84	72.00	70.10	5.00	6.00	4.00
M30 (A33)	B6D0330092	33.00	34.00	92.00	89.80	6.00	7.00	5.00
M36 (A39)	B6D0336110	39.00	40.00	110.00	107.80	8.00	9.20	8.00

Sizes in BLUE are non-prefered. Availability is limited and MOQ higher.

Data is strictly informative

* marked sizes have alternate dimensions not as per standard ** marked sizes are as per NF-E25-513/514

Note: All Austenitic Stainless Steel Fasteners may exhibit some magnetic properties due to the manufacturing process.

Refer: ISO 3506-2 Annex F